TX30 TRUSS SYSTEM
TECHNICAL DATA

TX30

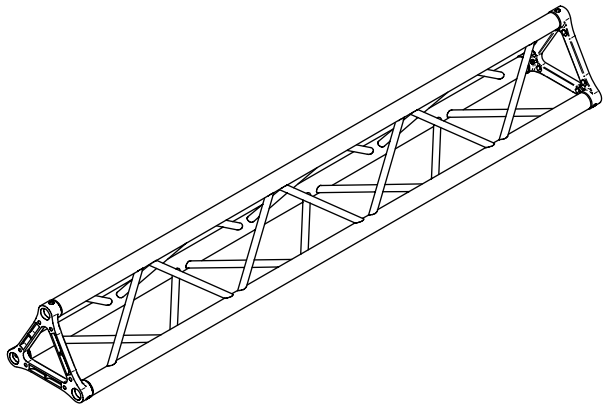

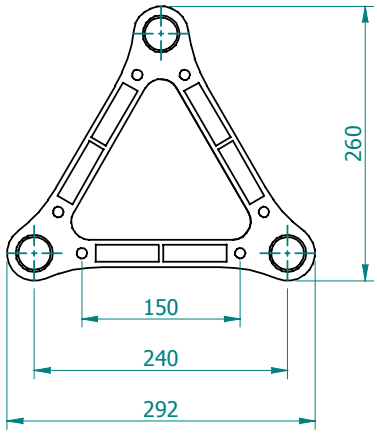

Description	Specification
External dimensions (height x width)	292 mm x 260 mm
Distance between axis	239 mm
Lenghtways tubes	Extruded aluminium EN-AW 6082 T6 - Ø50x2mm
Crossways tubes	Extruded aluminium EN-AW 6082 T6 - Ø20x2mm
Connecting plate	Cast aluminium EN AC 47000
Welding process	TIG (UNI8634 / DIN4113)
Available length [cm]	10,5 – 21 – 25 – 50 – 100 – 150 – 200 – 250 – 300 – 350 - 400

Section Area [mm²]	Moment of Inertia Y – axis [mm⁴]	Moment of Inertia Z – axis [mm⁴]	Allowable bending moment Y – axis [kNm]	Allowable bending moment Z – axis [kNm]	Selfweight (approx.) [N/m]
905	8.729.052	8.729.052	2,70	3,03	44,0

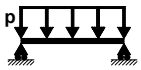

TX30 uniformly distributed load

Load [Kg/m] \ Truss length [m]	3	4	5	6	7	8	9	10	11	12	13
	Deflection [mm]										
120	2	6									
110	2	6									
100	2	5	13								
90	2	5	12								
80	1	4	11								
70	1	4	9	19							
60	1	3	8	16							
50	1	3	7	14	25						
40	1	2	5	11	20	35					
30	1	2	4	8	15	26	41	63			
20	0	1	3	5	10	17	28	42	62		
10	0	1	1	3	5	9	14	21	31	44	60

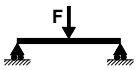

TX30 centre point load

Load [Kg] \ Truss length [m]	3	4	5	6	7	8	9	10	11	12	13
	Deflection [mm]										
280	3	6									
260	2	6									
240	2	5									
220	2	5	9								
200	2	4	8								
180	2	4	8	13							
160	1	3	7	12	18						
140	1	3	6	10	16	24					
120	1	3	5	9	14	21	29	40			
100	1	2	4	7	12	17	25	34	45	58	
80	1	2	3	6	9	14	20	27	36	47	59
60	1	1	3	4	7	10	15	20	27	35	44

You can find in the catalogue the available dimensions of truss and respective weights.
These technical data are not valid for circular truss.
These technical data are valid only for structures entirely assembled with Litec materials.